KENDAL LEVER LATCH HANDLE

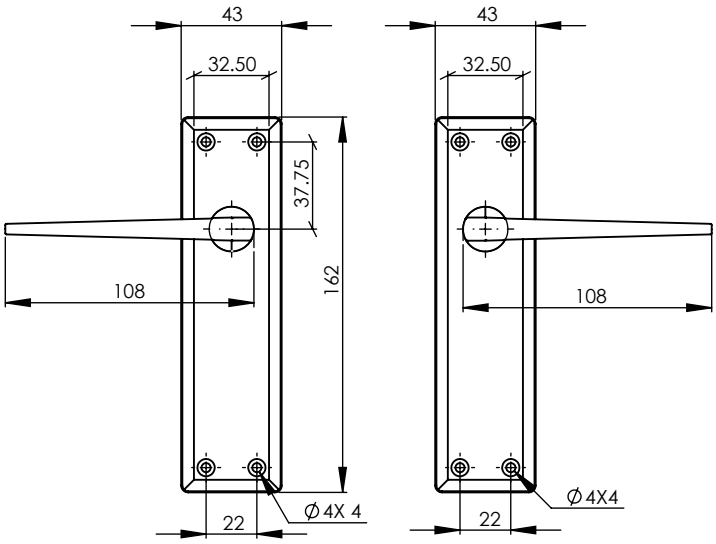

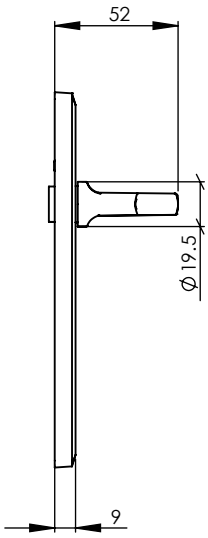

This latch handle is suitable for use with most U.K. tubular latches.
For a new interior door installation we would recommend using our York standard tubular latch from the list below.

3

Iron starter screw x 1pc.
Drill pilot holes, use the starter screw to cut a thread

2

Spindle : 7.8mm x 85mm - 1pc.

8x Brass wood screws
Fasten the brass screw into the pilot hole

Box Contains	1	2	3
	Lever handle illustrated	1x 85mm spindle suitable for 35mm & 45mm thick door	1x Iron screw 8x Brass wood screws

FINISHES

- MB Matt Bronze
- SB Satin Brass
- SN Satin Nickel
- AT Antique Brass
- PB Polished Brass
- PC Polished Chrome

TUBULAR LATCH
(not Included, must be ordered seperately)

YKTL2N-AT	2½″ Antique Finish
YKTL2N-BLK	2½″ Black Finish
YKTL2N-MB	2½″ Matt Bronze Finish
YKTL2N-PB	2½″ Brass Finish
YKTL2N-PC&PN	2½″ Polished Chrome & Nickel Finish
YKTL2N-SB	2½″ Satin Brass Finish
YKTL2N-SN&SC	2½″ Satin Nickel & Chrome Finish
YKTL3N-AT	3″ Antique Finish
YKTL3N-BLK	3″ Black Finish
YKTL3N-MB	3″ Matt Bronze Finish
YKTL3N-PB	3″ Brass Finish
YKTL3N-PC&PN	3″ Polished Chrome & Nickel Finish
YKTL3N-SB	3″ Satin Brass Finish
YKTL3N-SN&SC	3″ Satin Nickel & Chrome Finish

M Marcus Ltd., Dudley

Product Code	Material
KEN6810	Solid Brass

Sizes shown are in mm and approximate.
We reserve the right to amend where necessary and without any prior notice.

Property of M Marcus Ltd. ©