C1685 8″ DOOR FLAT BOLT

2

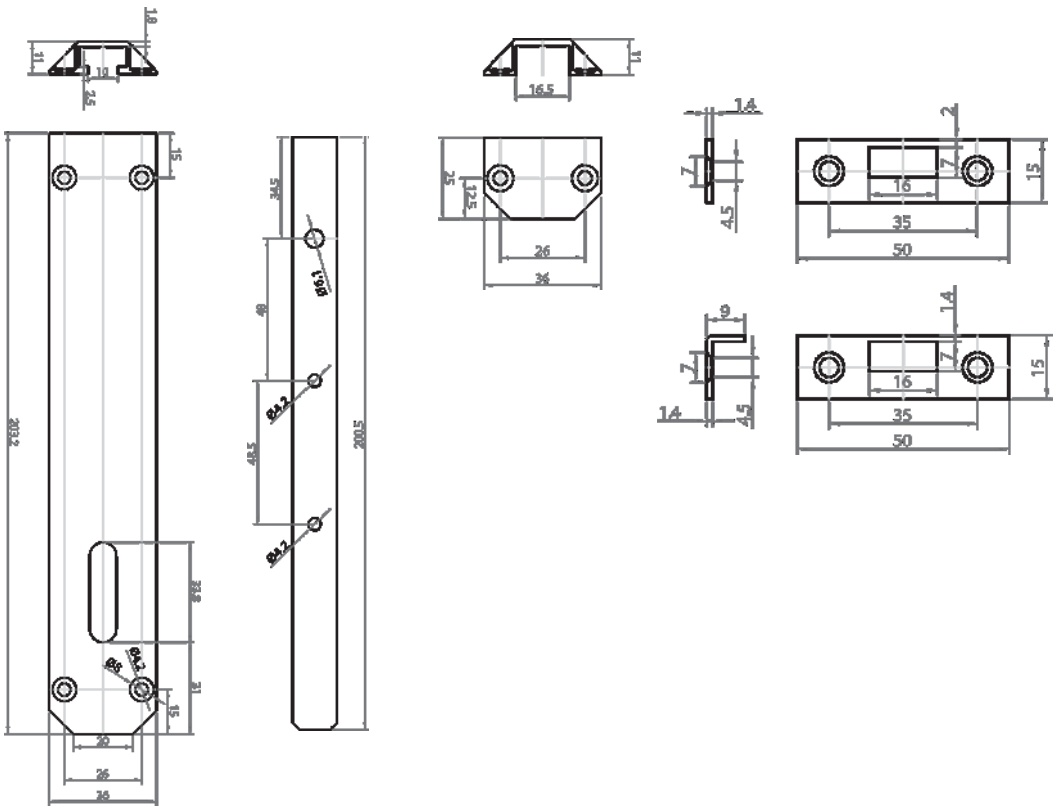

1

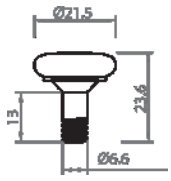

2 Dimensions:
see the outlines given above

3

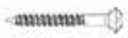

6 x Flat Head Dome
Brass Screw

4 x Phillips Flat Head CSK
Brass Screw

FINISHES

- ME Matt Bronze finish
- SB Satin Brass finish
- PN Polished Nickel finish
- SN Satin Nickel finish
- AT Antique Brass finish
- SC Satin Chrome finish
- PB Polished Brass finish
- PC Polished Chrome finish

Overview	1 Flat Bolt illustrated	2 (General dimensions of Flat Bolt)	3 Supplied with: 6 x 25mm Brass Screws 4 x 20mm Brass cross screws

M Marcus Ltd., Dudley

Product Code	Material
C16858″	Solid Brass

Sizes shown are in mm and approximate.
We reserve the right to amend where necessary and without any prior notice.

Property of M Marcus Ltd. ©